HOPPER & FRAME ASSEMBLY

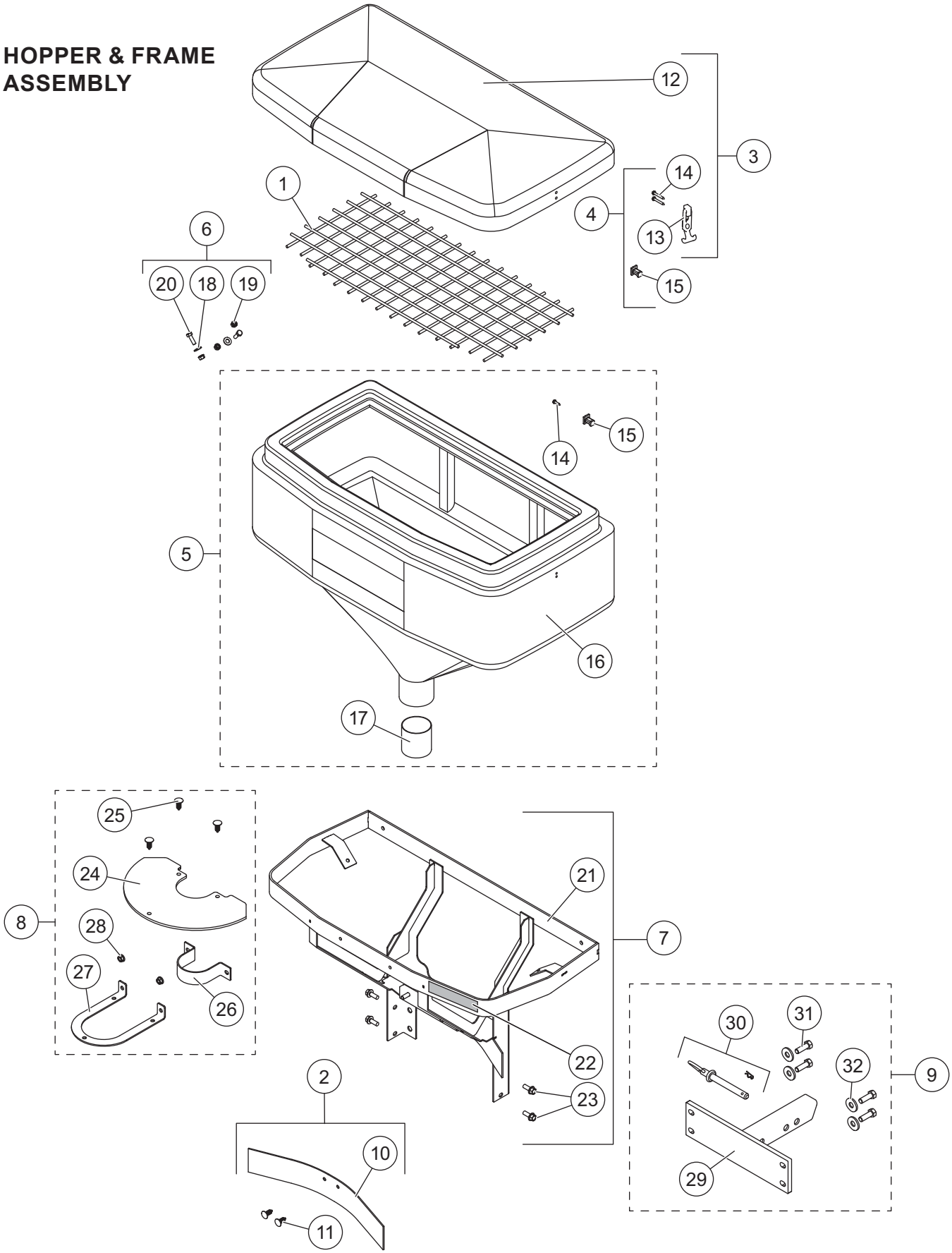

Hopper & Frame Assembly							
Item	**Part**	**Qty**	**Description**	**Item**	**Part**	**Qty**	**Description**
1	75636	1	Top Screen Kit, SP-575X	6	75614	1	Hopper Hardware Kit
2	75646	1	Deflector Kit	7	75632	1	Frame Kit, SP-575X
3	75630	1	Lid Kit	8	75639	1	CE Shroud Kit
4	75612	1	Hopper Strap Kit	9	75633	1	Receiver Kit
5	75631	1	Hopper Kit, SP-575X	ns	95059*	1	Vibrator Kit
Item 2			**75646 Deflector Kit**				
10	D6110	1	3 x 20 Plastic Deflector	11		2	11 mm x 28 mm x 22 mm Retainer
Item 3			**75630 Lid Kit**				
12		1	Hopper Lid Assembly	14		4	#10 x 3/4 Slotted Cap Screw
13	D6105	2	Flexible Draw Latch				
Item 4			**75612 Hopper Strap Kit**				
13	D6105	2	Flexible Draw Latch	15	D6198	2	Latch Keeper
14		6	#10 x 3/4 Hex Slotted Washer-Head Cap Screw				
Item 5			**75631 Hopper Kit, SP-575X**				
14		2	#10 x 3/4 Hex Slotted Washer-Head Cap Screw	16		1	Hopper Assembly (yellow)
				17		1	Throat Liner SS
15	D6198	2	Latch Keeper				
Item 6			**75614 Hopper Hardware Kit**				
18		2	3/8 Flat Washer	20		2	5/16-18 x 1-1/4 Hex Cap Screw
19		2	5/16-18 Hex Locknut GB				
Item 7			**75632 Frame Kit, SP-575X**				
21		1	Main Frame, SP-575X	23		4	3/8 x 1 Hex Cap Screw
22	70441	1	Label – Logo, SP-575X				
Item 8			**75639 CE Shroud Kit**				
24		1	CE Shroud Tailgate	27		1	Mount Bracket, Shroud
25		3	11 mm x 28 mm x 22 mm Retainer	28		2	3/8-16 Serrated Flange Nut
26		1	Throat Clamp				
Item 9			**75633 Receiver Kit**				
29		1	Mount, Receiver	31		4	1/2-13 x 1-1/2 Serrated Flange Hex Cap Screw
30	75620	1	5/8 x 5-1/2 Hitch Pin w/Hairpin Cotter	32		4	1/2 Lock Washer
ns = not shown				G = Grade			SS = Stainless Steel

* Accessory only.