SPINNER DRIVE ASSEMBLY

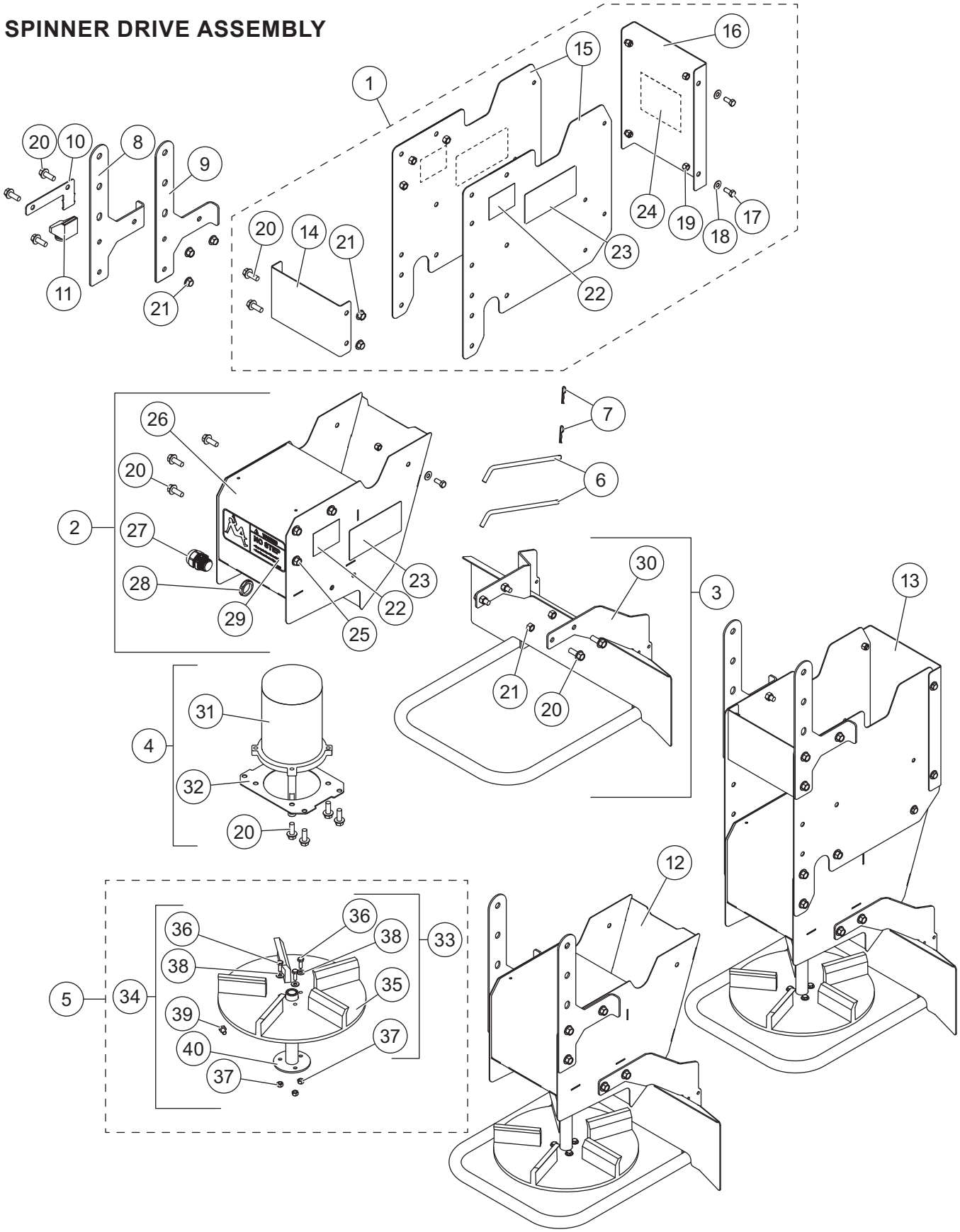

Spinner Drive Assembly Components							
Item	**Part**	**Qty**	**Description**	**Item**	**Part**	**Qty**	**Description**
1	80221*	1	Chute Extension Kit	8	11871	1	Chute Hanger – DS
2	85434	1	Spinner Drive Housing	9	11872	1	Chute Hanger – PS
3	85437	1	Spinner Guard Service Kit	10	90774	1	Cable Boot Bracket
4	85436	1	Spinner Motor Service Kit	11	11992	1	Spinner Harness Dust Cover
5	80222	1	Spinner Disk Kit	12	77570	1	Spinner Drive Assembly Kit
6	11981	2	Chute Locking Pin	13	77571	1	Spinner Drive Extension Assembly Kit
7	D4135	2	0.093 x 2-3/8 Hair Pin Cotter, Zinc				
Item 1			**80221* Chute Extension Kit**				
14		1	Chute Extension Stiffener	20		6	3/8-16 x 1 Serrated Flange Hex Cap Screw SS
15		2	Chute Extension Side Plate				
16		1	Chute Extension Funnel	21		6	3/8-16 Locknut SS
17		6	5/16-18 x 3/4 Hex Cap Screw SS	22	29593	2	Label – Warning, Multiple Pinch Points
18		6	5/16 Flat Washer SS	23	11100	1	Label – Warning, Rear Camera
19		6	5/16-18 Hex Locknut SS	24	92971	1	Label – Warning, Disconnect
Item 2			**85434 Spinner Drive Housing**				
20		6	3/8-16 x 1 Serrated Flange Hex Cap Screw SS	26		1	Chute Motor Enclosure
				27		1	10/2 3/4 NPT Strain Relief
22	29593	2	Label – Warning, Multiple Pinch Points	28		1	3/4 Locknut, Nylon
23	11100	1	Label – Warning, Rear Camera	29	D6545	1	Label – Warning, No Step
25		6	3/8-16 Hex Rivnut SS				
Item 3			**85437 Spinner Guard Service Kit**				
20		4	3/8-16 x 1 Serrated Flange Hex Cap Screw SS	21		4	3/8-16 Locknut SS
				30		1	Deflector
Item 4			**85436 Spinner Motor Service Kit**				
20		4	3/8-16 x 1 Serrated Flange Hex Cap Screw SS	31	D6887	1	Spinner Motor, Direct Drive
				32		1	Spinner Motor Plate
Item 5			**80222 Spinner Disk Kit**				
33	85438	1	Spinner Disk Service Kit	34	85439	1	Spinner Disk Mount Service Kit
Item 33			**85438 Spinner Disk Service Kit**				
35	D6823	1	12 x 5/8 Spinner	37		3	1/4-20 Locknut Zinc
36		3	1/4-20 x 1 Serrated Hex Washer-Head Cap Screw SS	38		3	1/4 Flat Washer SS
Item 34			**85439 Spinner Disk Mount Service Kit**				
36		3	1/4-20 x 1 Serrated Hex Washer-Head Cap Screw SS	38		3	1/4 Flat Washer SS
				39		1	5/16-18 x 1/2 Hex Cap Screw SS
37		3	1/4-20 Locknut Zinc	40	11874	1	Spinner Hub
			ns = not shown				SS = Stainless Steel

* Accessory only for 1.5 & 2.25 yd^3 hopper spreaders.