## ELECTRICAL BOX ASSEMBLY

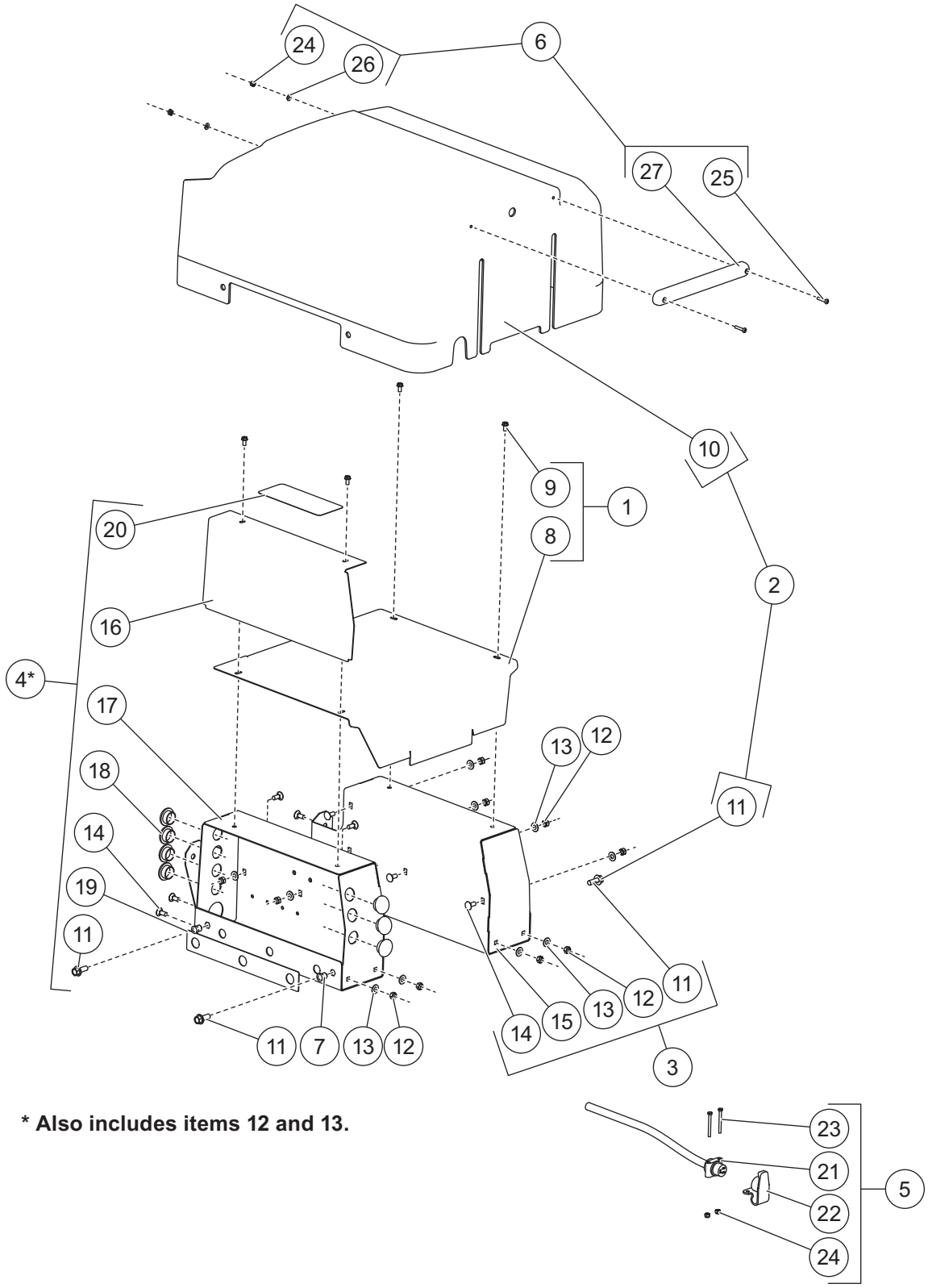


*** Also includes items 12 and 13.**

| Electrical Box/Saddle Bag Assembly Components | | | | | | | |
|---|---|---|---|---|---|---|---|
| **Item** | **Part** | **Qty** | **Description** | **Item** | **Part** | **Qty** | **Description** |
| 1 | 85474 | 1 | Trough Extension Cover Kit | 5 | 85448 | 1 | Spinner Module Cable Kit |
| 2 | 85445 | 1 | Auger Extension Cover Kit | 6 | 85449 | 1 | CHMSL Kit |
| 3 | 85446 | 1 | Saddle Bag Kit | 7 | 99254 | 3 | Push Button Switch |
| 4 | 85447 | 1 | Electrical Box Kit | | | | |
| **Item 1** | | | **85474 Trough Extension Cover Kit** | | | | |
| 8 | 99875 | 1 | Trough Extension Cover | 9 | | 4 | 1/4-20 x 3/4 Hex Washer-Head Machine Screw |
| **Item 2** | | | **85445 Auger Extension Cover Kit** | | | | |
| 10 | 11856 | 1 | Auger Extension Cover | 11 | | 4 | 3/8-16 x 1 Hex Cap Screw SS |
| **Item 3** | | | **85446 Saddle Bag Kit** | | | | |
| 11 | | 2 | 3/8-16 x 1 Hex Cap Screw SS | 14 | | 7 | 5/16-18 x 3/4 Carriage Bolt SS |
| 12 | | 7 | 5/16-18 Hex Locknut | 15 | | 1 | Saddle Bag Frame |
| 13 | | 7 | 5/16 Flat Washer SS | | | | |
| **Item 4** | | | **85447 Electrical Box Kit** | | | | |
| 11 | | 2 | 3/8-16 x 1 Hex Cap Screw SS | 17 | | 1 | Electrical Enclosure |
| 12 | | 7 | 5/16-18 Hex Locknut | 18 | | 7 | Break-Thru Plug |
| 13 | | 7 | 5/16 Flat Washer SS | 19 | 77420 | 1 | Label – Information, Material Flow/ Work Light Control |
| 14 | | 7 | 5/16-18 x 3/4 Carriage Bolt SS | | | | |
| 16 | | 1 | Electrical Box Cover | 20 | D6335 | 1 | Label – Warning, Rotating Auger |
| **Item 5** | | | **85448 Spinner Module Cable Kit** | | | | |
| 21 | | 1 | Cable Assembly Spinner Module | 23 | | 2 | #10-32 x 2 Hex Cap Screw SS |
| 22 | | 1 | Dust Cover, Spinner Plug | 24 | | 2 | #10-32 Hex Locknut GB SS |
| **Item 6** | | | **85449 CHMSL Kit** | | | | |
| 24 | | 2 | #10-32 Hex Locknut GB SS | 26 | | 2 | #10 Flat Washer SS |
| 25 | | 2 | #10-32 x 1 Phillips Pan Head Screw SS | 27 | | 1 | CHMSL, 8" Lead |
| G = Grade | | | | SS = Stainless Steel | | | |